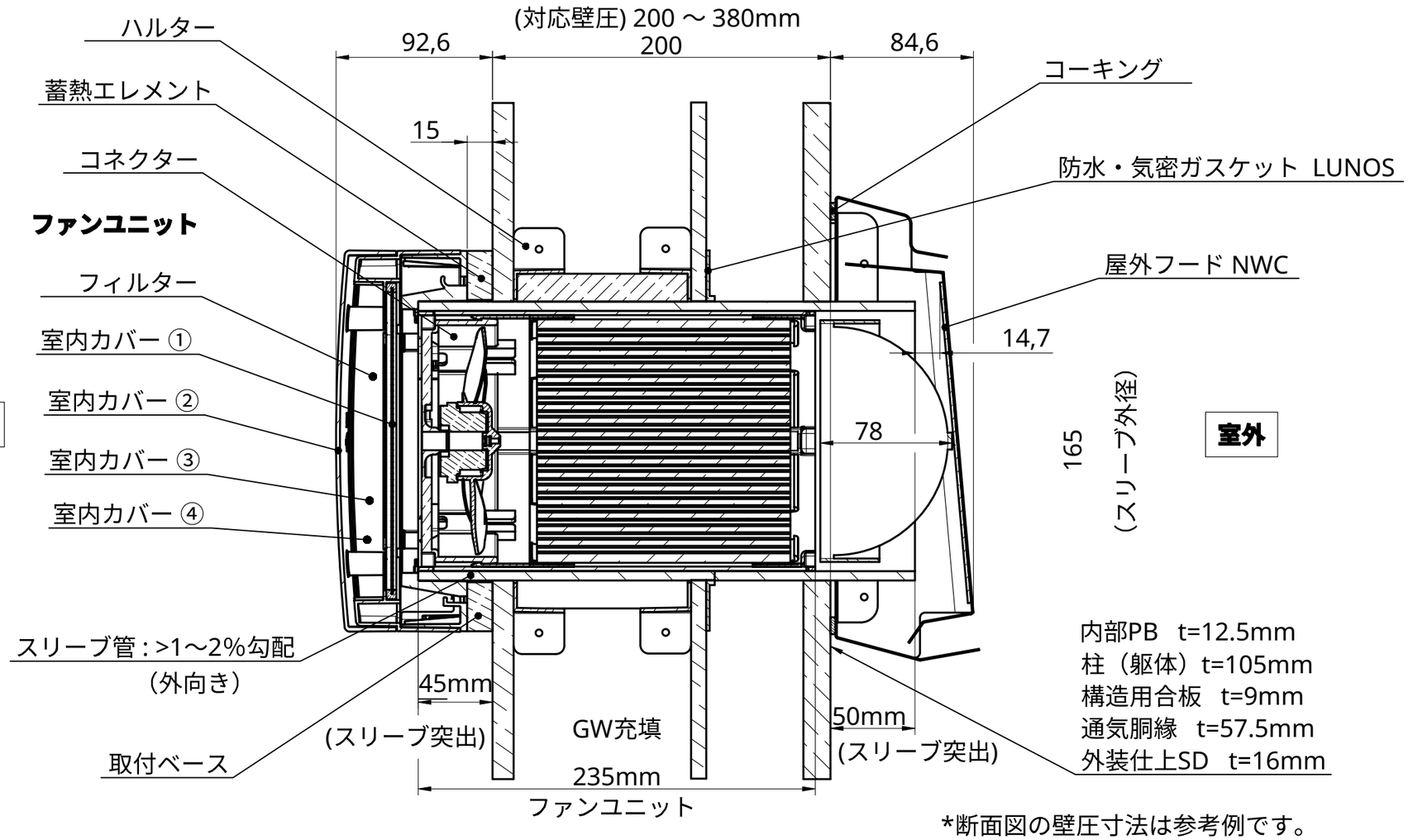

*断面図の壁圧寸法は参考例です。

		NAME	SIGNATURE	DATE
UNLESS OTHERWISE SPECIFIED, DIMENSIONS ARE IN MILLIMETERS	DRAWN	SALIM BEN HALIMA		2024-04-25
ANGULAR = ± °	CHECKED	CHRISTIAN DEUTINGER		2024-04-25
SURFACE FINISH	APPROVED			
DO NOT SCALE DRAWING				
BREAK ALL SHARP EDGES AND REMOVE BURRS				
FIRST ANGLE PROJECTION	MATERIAL		FINISH	

Passiv Energie Japan Inc.

TITLE

S400_NWC-SS + Fire Damper

SIZE	DWG NO.	REV.
A3		

SCALE	WEIGHT	SHEET
1:3		1 of 1